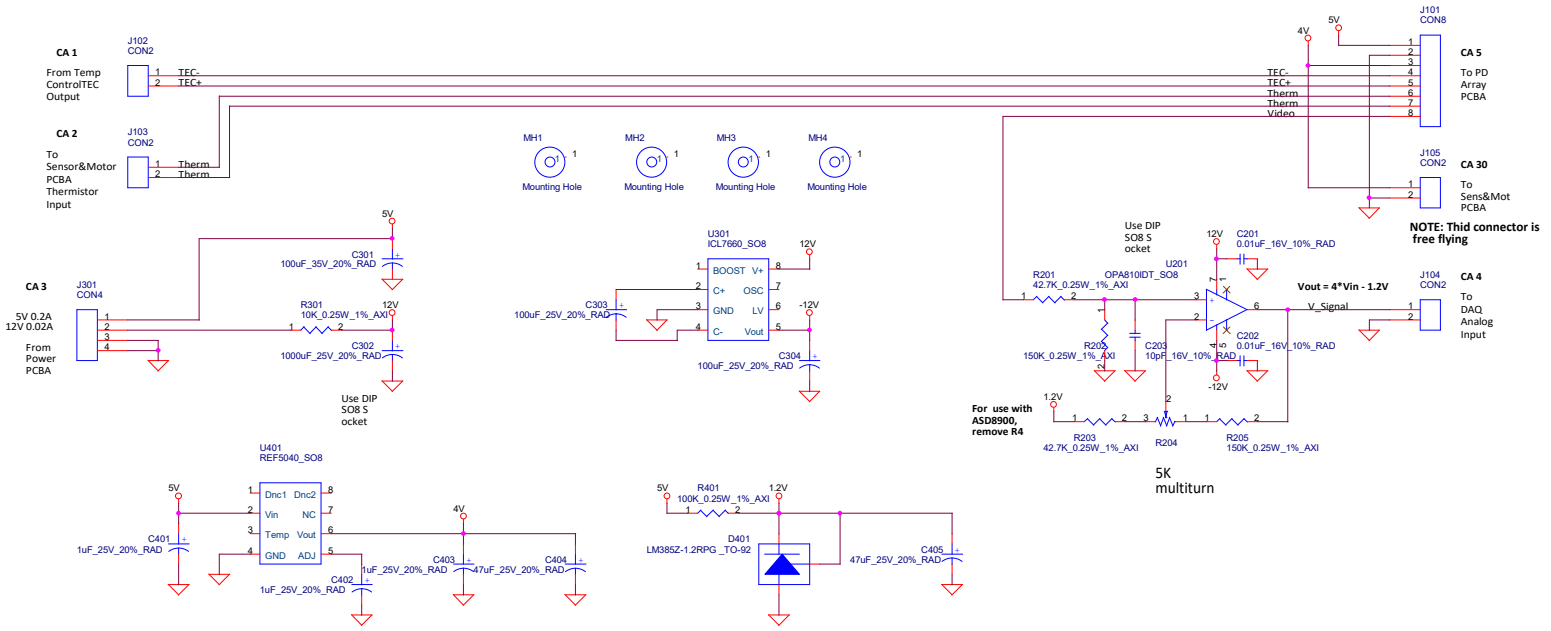

Title	RP-PDArray Power v2r4 - M. Pitsakis	
Size C	Document Number <Doc>	Rev
Date: Wednesday, March 22, 2023	Sheet of 1	